IØJXX di Donzello Rosanna
Via della Fattoria di Torrenova 36 - 00133 Roma - Italy
☎ & Fax +39 (0) 6 - 27858223 +39 3282899664
VAT number: IT09527381009
www.i0jxx.com - info@i0jxx.com

8JXX2 Yagi

Item		Q.ty	Item		Q.ty
Stainless steel nut M4		4	Stainless steel bolt M4x35		6
Stainless steel nut M6		8	Ergal Plate **PIA30JXX**		1
Nylon nut M8		7	Clamp Bazooka		1
Lock washer 4 mm Ø		6	Dipole with Bazooka		1
Lock washer 6 mm Ø		8	Section boom **A** 25 mm Ø	147 cm.	1
Flat washer 6 mm Ø		8	Section boom **A - B** 30 mm Ø	147 cm.	1
Inbuss key 3 mm.		1	Section boom **B** 25 mm Ø	147 cm.	1
			Horizontal element **1÷8**		1

Total Field EZNEC+

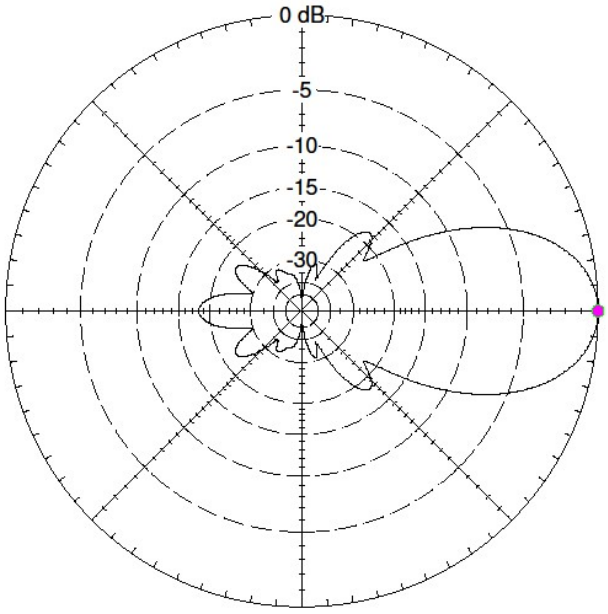

Dipole in free space 144,4 MHz

Azimuth Plot		Cursor Az	0,0 deg.
Elevation Angle	0,0 deg.	Gain	14,28 dBi
Outer Ring	14,28 dBi		0,0 dBmax
			0,0 dBmax3D
3D Max Gain	14,28 dBi		
Slice Max Gain	14,28 dBi @ Az Angle = 0,0 deg.		
Front/Back	18,13 dB		
Beamwidth	34,8 deg.; -3dB @ 342,6, 17,4 deg.		
Sidelobe Gain	-3,79 dBi @ Az Angle = 49,0 deg.		
Front/Sidelobe	18,07 dB		

Total Field EZNEC+

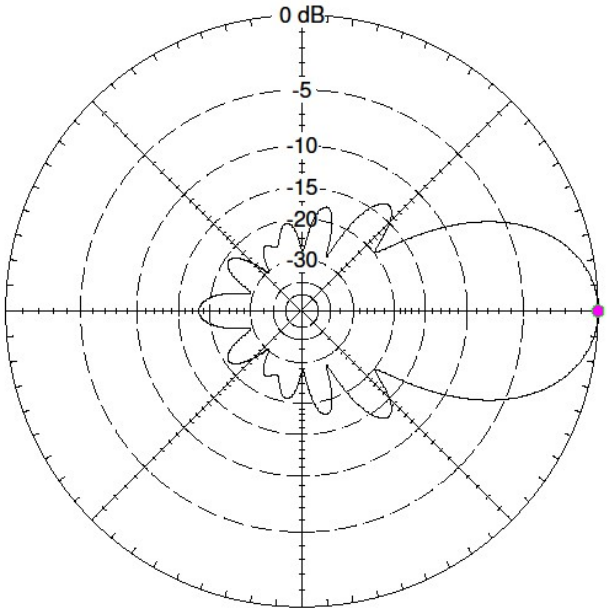

Dipole in free space 144,4 MHz

Elevation Plot		Cursor Elev	0,0 deg.
Azimuth Angle	0,0 deg.	Gain	14,28 dBi
Outer Ring	14,28 dBi		0,0 dBmax
			0,0 dBmax3D
3D Max Gain	14,28 dBi		
Slice Max Gain	14,28 dBi @ Elev Angle = 0,0 deg.		
Front/Back	18,13 dB		
Beamwidth	38,2 deg.; -3dB @ 340,9, 19,1 deg.		
Sidelobe Gain	1,01 dBi @ Elev Angle = 51,0 deg.		
Front/Sidelobe	13,27 dB		

IØJXX may vary them without any warning
Made in Italy
www.iØjxx.com

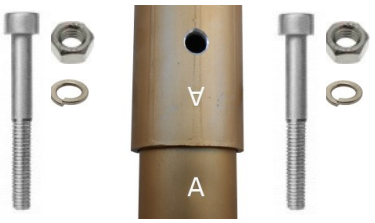

Combine the boom respecting the letters placed at the ends of each section
Insert the screws M4x35 mm washer and nut into the junction points **A - A** and **B - B**

Kombinieren Sie den Boom und achten Sie dabei auf die Buchstaben am Ende jeder Sektion
Fügen Sie die Schrauben M4x35 mm Unterlegscheibe und Mutter in die Verbindungsstellen **A - A** und **B - B**

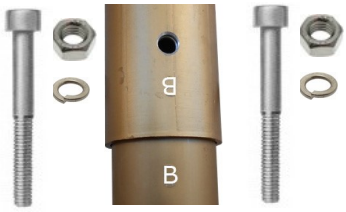

Combinez le boom sur les lettres placées aux extrémités de chaque section
Insérez les vis M4x35 mm rondelle et un écrou dans les points de jonction **A - A** et **B - B**

Unire il boom rispettando le lettere poste alle estremità di ogni singola sezione
Inserire le viti M4x35 mm rondella e dado, nei punti di giunzione **A - A** e **B - B**

Attach the mounting plate between boom and mast **PIA30JXX** between elements **3 – 4**

Montieren Sie die Montageplatte zwischen Ausleger und Mast **PIA30JXX** zwischen den Elementen **3 – 4**

Fixez la plaque de montage entre la flèche et le mât **PIA30JXX** entre les éléments **3 – 4**

Montare la piastra di fissaggio tra boom e mast **PIA30JXX** tra gli elementi **3 - 4**

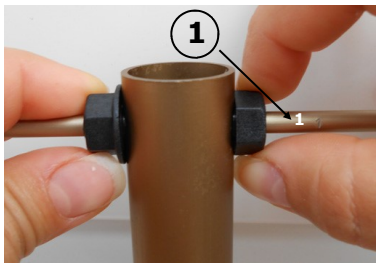

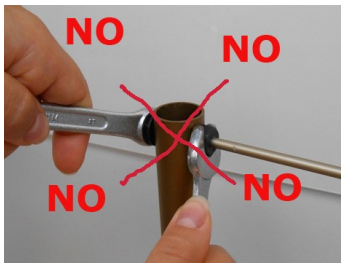

Insert elements as shown in the figure, hand tighten the nut M8 Nylon (**do not use keys as the material used has a self – locking function**)

Fügen Sie die Elemente hinein wie in der Abbildung dargestellt, schrauben Sie die Mutter M8 Nylon mit den Händen zusammen (**benutzen Sie keine Schlüssel, da das verwendete Material eine Selbstverriegelung hat**)

Insertion d'éléments comme indiqué sur la figure, serrez à la main l'écrou M8 nylon (**ne pas utiliser les touches que le matériau utilisé a une auto - verrouillage)**

Inserire gli elementi come riportato in figura, stringere a mano il dado in Nylon da M8 (**non utilizzare chiavi in quanto il materiale impiegato ha effetto auto – bloccante**)

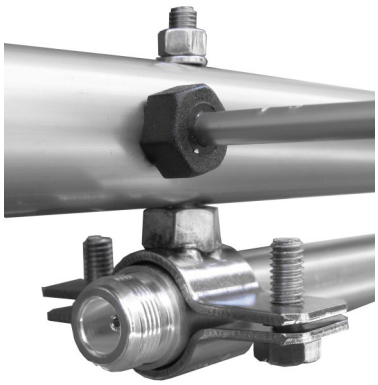

Match the dipoles with M4x35 mm and washer as shown in photo

Verbinden Sie die Dipole mit der M4x35 mm Schraube und der Unterleg-scheibe wie das Foto zeigt

Installez les dipôles avec M4x35 mm et la rondelle comme indiqué sur la photo

Montare i dipoli con vite M4x35 mm e rondella come indicato in foto

Stacking

In order to obtain the best results in coupling the antennas, we warmly recommend an adequate antenna stacking calculation which would allow the best forward gain together with low side lobes. The stacking distance may be calculated with the following formula from Güenter Hoch DL6WU
On the basis of further studies conducted by Lionel VE7BQH over the antenna stacking argument, a reduction of 5÷10% may be introduced on stacking distances without noticing significant overall worsening of the characteristics. Do respect the driven element supplying symmetry to allow anti-phase coupling

$$\textbf{Plane E} = 34.8° = \frac{2079}{2 * \sin(34.8 / 2)} = \frac{2079}{0.598} \cong \textbf{3.48 m}$$ (with VE7BQH from **3.3 m** to **3.13 m**)

$$\textbf{Plane H} = 38.2° = \frac{2079}{2 * \sin(38.2 / 2)} = \frac{2079}{0.6544} \cong \textbf{3.18 m}$$ (with VE7BQH from **3.02 m** to **2.86 m**)

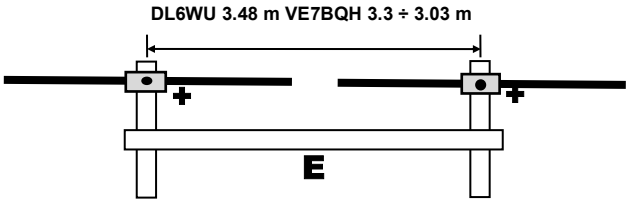

$$d = \frac{L}{2 * \sin(\Phi / 2)}$$

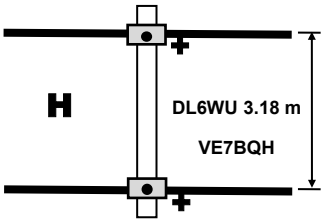

IØJXX may vary them without any warning
Made in Italy
www.iØjxx.com

8JXX2

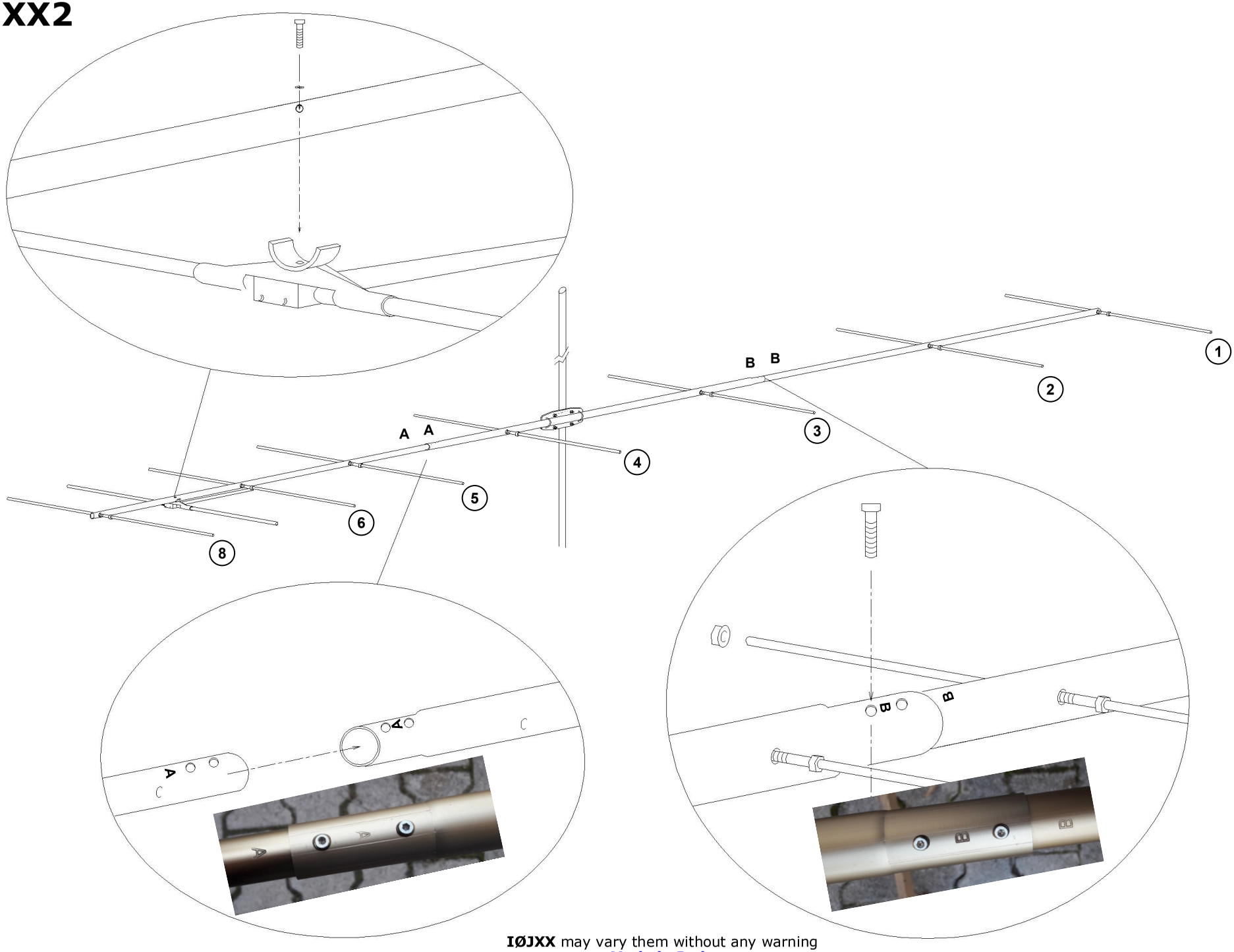

IØJXX may vary them without any warning

Made in Italy

www.iØjxx.com